MFL 90

(#80111)

Specification Sheet

Manual Multi Focal Length Surveillance Lens

The Questar MFL 90 is a surveillance lens for situations requiring a rugged, very compact and lightweight long focal length optic. Questar MFL lenses offer a compactness and variation in focal lengths unavailable with continuous zoom lenses. The MFL 90 offers five effective focal lengths from 480 mm to 3100 mm in a 35 cm, 5.4 kilogram package. Included are selectable neutral density or spectral filters for optimized performance under varying conditions. Manual control is performed from the large knobs at the rear of the system. Oversized LED integrated into rear plate to indicate current filters or EFL selection. The manual focus is smooth and precise utilizing the precision ball screw nut. The oversized lens/filter contol knobs have a single turn detent stop for precise alignment of selected lens or filter. The lens is weatherized with protective clear optical flats front and back. The optical performance of the MFL 90 is superb, capable of resolving on television a 7mm feature at 1 kilometer.

Performance

Working Range:	7 meters (20 ft.) to infinity
Resolution:	1.0 arc section Resolution is defined as the measurable separation of a space between two bars on a resolution target. Each instrument is tested to meet these figures.
Format:	Diffraction limited field 18 mm at 1300 mm EFL.
Clear Aperture:	89 mm (3.5 inches)

Available Effective Focal Lengths

480 mm	f/5.4	T6.6
660 mm	f/7.4	T9.1
820 mm	f/9.2	T11.3
950 mm	f/10.7	T13.1
1300 mm	**f/14.6**	**17.8***
2250 mm	f/25.0	T30.6
3100 mm	f/34.8	T42.6

* system focal length, required

Optical:

Design Type:	Maksutov Cassegrain Catadioptric
Corrector:	BK7, Magnesium Flouride AR coated, 89 mm (3.5 inches) diameter
Primary Mirror:	Pyrex substrate, aluminum coated, SiO overcoat 96 mm (3.78 inches) diameter
Secondary Mirror:	Aluminum coating on R2 surface of corrector, 28.7 mm diameter
Protective Flats:	BK7 plane/parallel, magnesium flouride AR coated. Diameters: front 90 mm, rear 36 mm. Do not affect system performance of diffraction limited to 1/8 wave.
Baffling:	Helix in main baffle tube, all internal surfaces anti-reflection coated.
Image Sensor:	For use with video cameras of any type, C-mount standard. Will also support eyepieces for visual use and most digital cameras.

Available Filter Selections

N.D. 0.1
N.D. 0.3
N.D. 0.8
N.D. 1.0
N.D. 1.5
N.D. 2.0
N.D. 2.5

All N.D. filters evaporated chrome.
(standard filters are in bold)
Colored filter on request.

Mechanical:

Barrel Section:	Modular design three piece plate aluminum construction. Sheet aluminum outer shell. Front protective flat in cell.
Focus:	Transiting corrector design, supported in 6 precision linear bearings on non-stressed rods. Precision lead screw mechanism. Dual manual focus knobs.
Turret Section:	Modular design two piece machined aluminum housing and cover. “P” thread camera port with integrated protective flat; removable. LED position indicators integrated into rear plate. Internal battery compartment with on/off switch. Oversized manual knobs for manual control.
	Two turrets: lens/filter, aluminum, 140 mm (5.5 inches) diameter, manual control direct drive. Bronze bushing/roller thrust bearings on 3/4” stainless steel shaft. Five positions. Adjustable auxiliary lens cells. See optical section for selection of filters and focal lengths.
Mirror Mounting:	Fixed mirror thimble/main baffle tube, stainless steel; adjustable centering.
Finish/Hardware:	All aluminum parts black anodized. All exterior surfaces anodized. Special colors by quotation. All hardware stainless steel. Includes hardshell case, lens covers, swivel coupling, C-mount adapter, manuals.
Mounting:	1/4” - 20 mounting holes on bottom housing plate.
Power:	Internal 1.5 volt 750 mA battery.
Dimensions:	35.5 cm (14 inches) long 21.6 cm (8.5 inches) tall 21 cm (8.3 inches) wide
Instrument Weight:	5.4 kg (12 pounds)

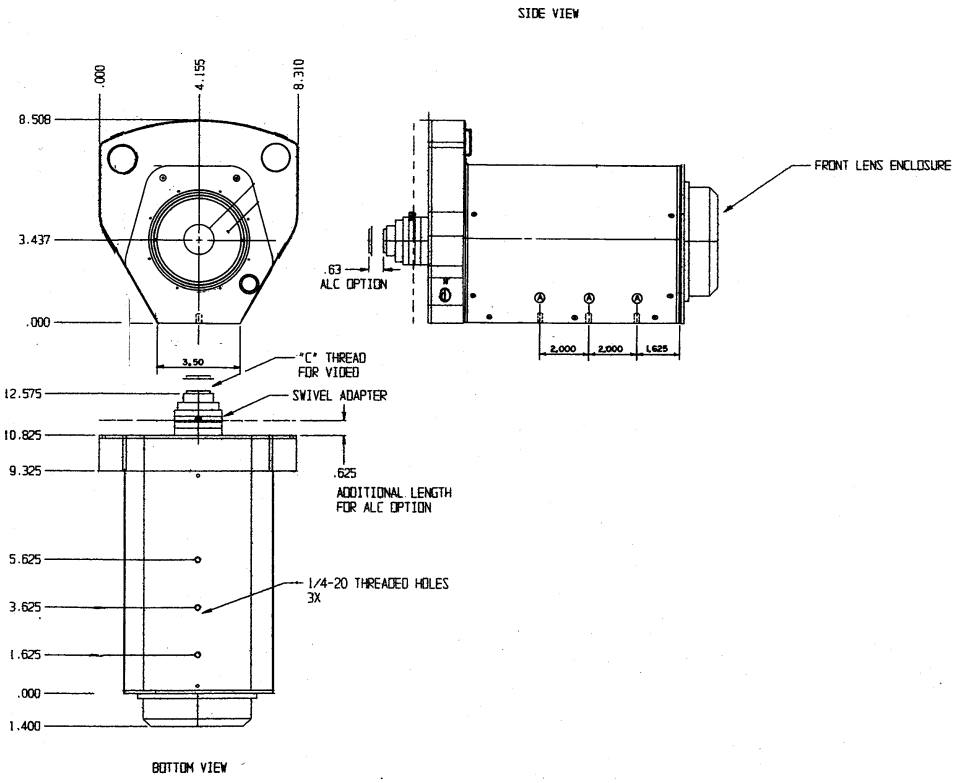

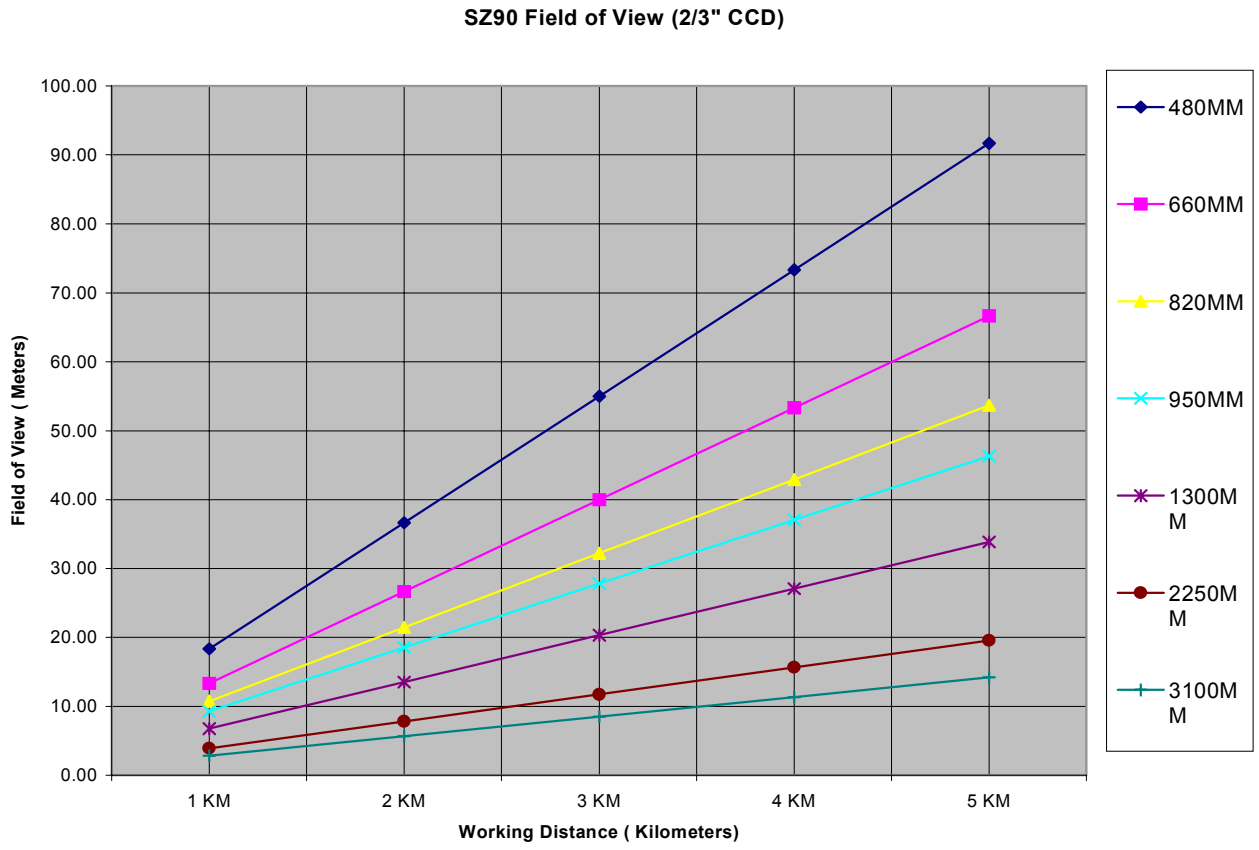

Company Seven
Box 2587
Montpelier, Maryland 20709 USA

Phone: 301-604-2500 or 301-953-2000
Fax: 301-953-2000

Email: info@company.com
Web: www.company7.com

all printed material copyright Questar Corporation , 2001